FUEL SYSTEM, LINES, STD. - Z26NEY99A4/B4/A6/B6 (C750806)

2026 RZR - RZR XP S 1000 ULTIMATE (R01) - Z26NEY99A4/B4/A6/B6

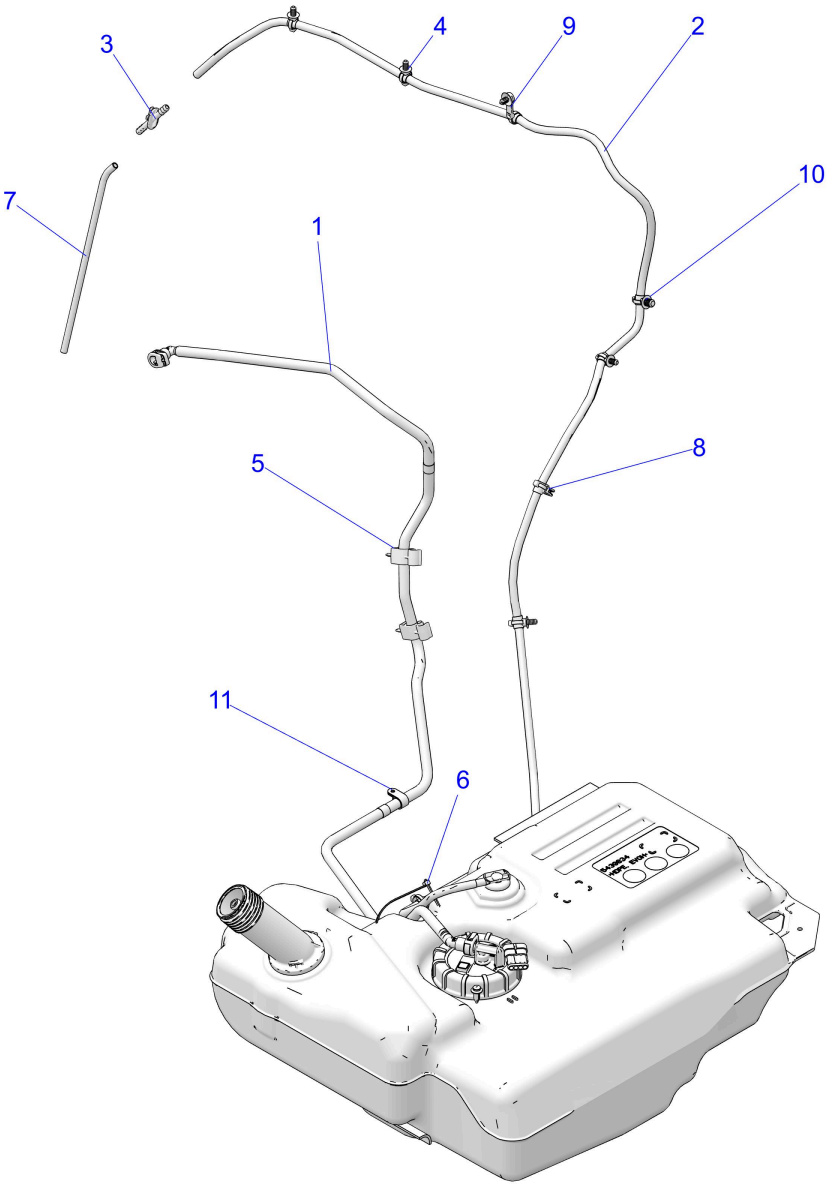

© 2024 Polaris Industries Inc. C750806

Reference #	*Part#*	*Description*	*Quantity*
1	2522542	ASM-FUEL LINE	1
2	2522543	ASM-VENT,FUEL	1
3	5457446	FITTING-VENT LINE,35	1
4	7081496	CLIP FIR-TREE,DIA6-33MM	6
5	7082641	CLIP-ROUTING	2
6	7080761	CABLE-TIE,10-102MM,WEATH.-RES.	1
7	2522400	ASM-VENT LINE,FUEL	1
8	7081808	CLIP-EDGE,1-3MM,6-45MM,SERT.	1
9	7082405	CLIP-OFFSET,FT6 FIR TREE	1
10	7082414	CLIP-FIR TREE,9.7-10.0MM HOLE	1

11	7080499	CLAMP-CABLE, 9/16 I.D.	1

Copyright 1996-2026 Polaris Industries U.S.A All rights reserved.